MP1584

3A, 1.5MHz, 28V Step-Down Converter

The Future of Analog IC Technology

DESCRIPTION

The MP1584 is a high frequency step-down switching regulator with an integrated internal high-side high voltage power MOSFET. It provides 3A output with current mode control for fast loop response and easy compensation.

The wide 4.5V to 28V input range accommodates a variety of step-down applications, including those in an automotive input environment. A 100μA operational quiescent current allows use in battery-powered applications.

High power conversion efficiency over a wide load range is achieved by scaling down the switching frequency at light load condition to reduce the switching and gate driving losses.

The frequency foldback helps prevent inductor current runaway during startup and thermal shutdown provides reliable, fault tolerant operation.

By switching at 1.5MHz, the MP1584 is able to prevent EMI (Electromagnetic Interference) noise problems, such as those found in AM radio and ADSL applications.

The MP1584 is available in a thermally enhanced SOIC8E package.

FEATURES

- Wide 4.5V to 28V Operating Input Range
- Programmable Switching Frequency from 100kHz to 1.5MHz
- High-Efficiency Pulse Skipping Mode for Light Load
- Ceramic Capacitor Stable
- Internal Soft-Start
- Internally Set Current Limit without a Current Sensing Resistor
- Available in SOIC8E Package.

APPLICATIONS

- High Voltage Power Conversion
- Automotive Systems
- Industrial Power Systems
- Distributed Power Systems
- Battery Powered Systems

"MPS" and "The Future of Analog IC Technology" are Registered Trademarks of Monolithic Power Systems, Inc.

NOT RECOMMENDED FOR NEW DESIGNS REFER TO MP2338

TYPICAL APPLICATION

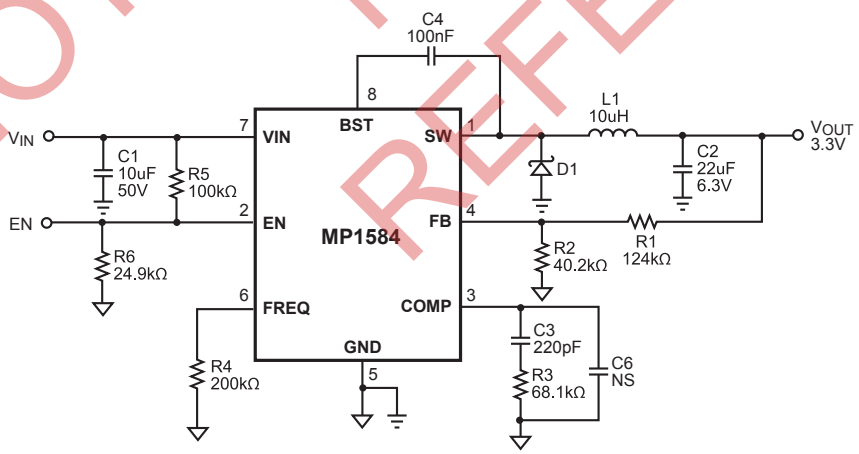

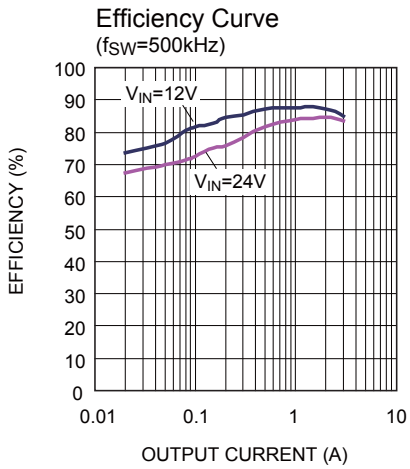

MPS Proprietary Information. Unauthorized Photocopy and Duplication Prohibited.
© 2011 MPS. All Rights Reserved.

ORDERING INFORMATION

Part Number*	Package	Top Marking	Free Air Temperature (T_A)
MP1584EN	SOIC8E	MP1584EN	–20°C to +85°C

* For Tape & Reel, add suffix –Z (e.g. MP1584EN–Z);
For RoHS Compliant Packaging, add suffix –LF. (e.g. MP1584EN–LF–Z)

PACKAGE REFERENCE

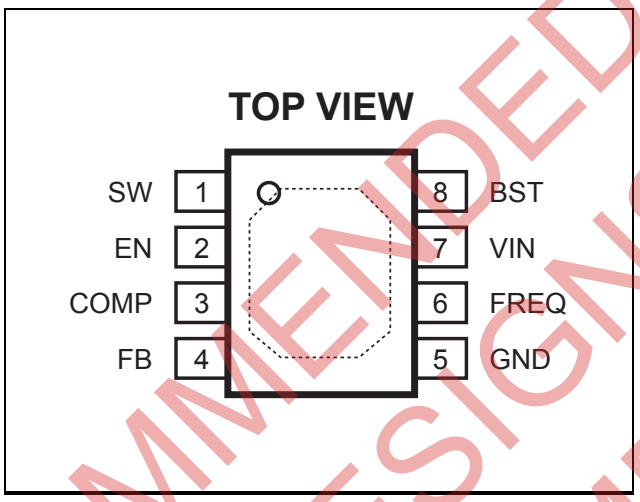

ABSOLUTE MAXIMUM RATINGS (1)

Supply Voltage (V_{IN}).....–0.3V to +30V
Switch Voltage (V_{SW}).....–0.3V to V_{IN} + 0.3V
BST to SW .....–0.3V to +6V
All Other Pins.....–0.3V to +6V
Continuous Power Dissipation (T_A = +25°C)(2)
..... 2.5W
Junction Temperature.....150°C
Lead Temperature .....260°C
Storage Temperature..... –65°C to +150°C

Recommended Operating Conditions (3)

Supply Voltage V_{IN} .....4.5V to 28V
Output Voltage V_{OUT}.....0.8V to 25V
Operating Junct. Temp (T_J) .....–20°C to +125°C

Thermal Resistance (4)	θ_{JA}	θ_{JC}
SOIC8E	50	10... °C/W

Notes:
1) Exceeding these ratings may damage the device.
2) The maximum allowable power dissipation is a function of the maximum junction temperature T_J(MAX), the junction-to-ambient thermal resistance θ_{JA}, and the ambient temperature T_A. The maximum allowable continuous power dissipation at any ambient temperature is calculated by P_D(MAX)=(T_J(MAX)-T_A)/ θ_{JA}. Exceeding the maximum allowable power dissipation will cause excessive die temperature, and the regulator will go into thermal shutdown. Internal thermal shutdown circuitry protects the device from permanent damage.
3) The device is not guaranteed to function outside of its operating conditions.
4) Measured on JESD51-7, 4-layer PCB.

NOT RECOMMENDED FOR NEW DESIGNS REFER TO MP2338

MPS Proprietary Information. Unauthorized Photocopy and Duplication Prohibited.
© 2011 MPS. All Rights Reserved.

ELECTRICAL CHARACTERISTICS

V_{IN} = 12V, V_{EN} = 2.5V, V_{COMP} = 1.4V, T_A= +25°C, unless otherwise noted.

Parameter	Symbol	Condition	Min	Typ	Max	Units
Feedback Voltage	V_{FB}	4.5V < V_{IN} < 28V	0.776	0.8	0.824	V
Upper Switch On Resistance	$R_{DS(ON)}$	V_{BST} – V_{SW} = 5V		150		mΩ
Upper Switch Leakage		V_{EN} = 0V, V_{SW} = 0V, V_{IN} = 28V		1		μA
Current Limit			4.0	4.7		A
COMP to Current Sense Transconductance	G_{CS}			9		A/V
Error Amp Voltage Gain (5)				200		V/V
Error Amp Transconductance		I_{COMP} = ±3μA	40	60	80	μA/V
Error Amp Min Source current		V_{FB} = 0.7V		5		μA
Error Amp Min Sink current		V_{FB} = 0.9V		–5		μA
VIN UVLO Threshold			2.7	3.0	3.3	V
VIN UVLO Hysteresis				0.35		V
Soft-Start Time (5)		0V < V_{FB} < 0.8V		1.5		ms
Oscillator Frequency		R_{FREQ} = 100kΩ		900		kHz
Shutdown Supply Current		V_{EN} = 0V		12	20	μA
Quiescent Supply Current		No load, V_{FB} = 0.9V		100	125	μA
Thermal Shutdown				150		°C
Thermal Shutdown Hysteresis				15		°C
Minimum Off Time (5)				100		ns
Minimum On Time (5)				100		ns
EN Up Threshold			1.35	1.5	1.65	V
EN Hysteresis				300		mV

Note:
5) Guaranteed by design.

NOT RECOMMENDED FOR NEW DESIGNS REFER TO MP2338

MPS Proprietary Information. Unauthorized Photocopy and Duplication Prohibited.
© 2011 MPS. All Rights Reserved.

PIN FUNCTIONS

SOIC Pin #	Name	Description
1	SW	Switch Node. This is the output from the high-side switch. A low forward drop Schottky diode to ground is required. The diode must be close to the SW pins to reduce switching spikes.
2	EN	Enable Input. Pulling this pin below the specified threshold shuts the chip down. Pulling it up above the specified threshold or leaving it floating enables the chip.
3	COMP	Compensation. This node is the output of the error amplifier. Control loop frequency compensation is applied to this pin.
4	FB	Feedback. This is the input to the error amplifier. The output voltage is set by a resistive divider connected between the output and GND which scales down V_{OUT} equal to the internal +0.8V reference.
5	GND Exposed Pad	Ground. It should be connected as close as possible to the output capacitor to shorten the high current switch paths. Connect exposed pad to GND plane for optimal thermal performance.
6	FREQ	Switching Frequency Program Input. Connect a resistor from this pin to ground to set the switching frequency.
7	VIN	Input Supply. This supplies power to all the internal control circuitry, both BS regulators and the high-side switch. A decoupling capacitor to ground must be placed close to this pin to minimize switching spikes.
8	BST	Bootstrap. This is the positive power supply for the internal floating high-side MOSFET driver. Connect a bypass capacitor between this pin and SW pin.

NOT RECOMMENDED FOR NEW DESIGNS REFER TO MP2338

MPS Proprietary Information. Unauthorized Photocopy and Duplication Prohibited.
© 2011 MPS. All Rights Reserved.

TYPICAL PERFORMANCE CHARACTERISTICS

V_{IN} = 12V, V_{OUT}=5V, C1 = 10µF, C2 = 22µF, L1= 10µH, T_A = +25°C, unless otherwise noted.

Oscillating Frequency vs. Rfreq

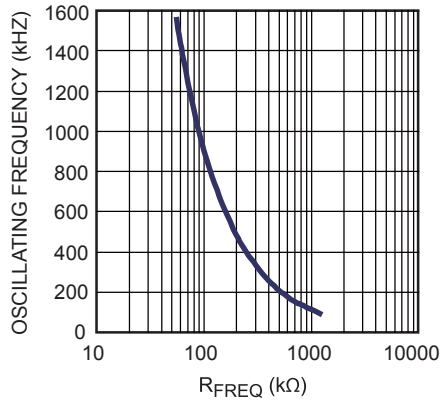

Steady State
I_{OUT}=0.1A, f_{SW}=500kHz

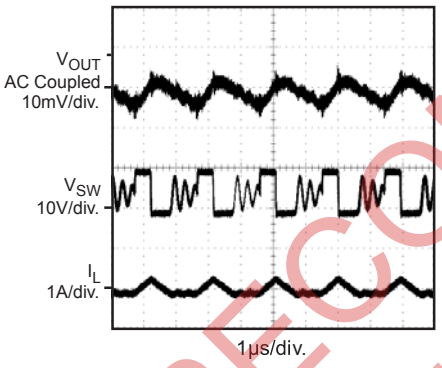

Steady State
I_{OUT}=1A, f_{SW}=500kHz

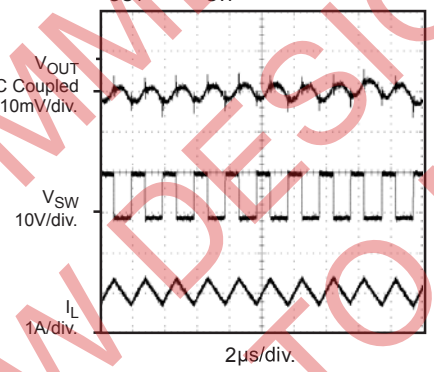

Steady State
I_{OUT}=2A, f_{SW}=500kHz

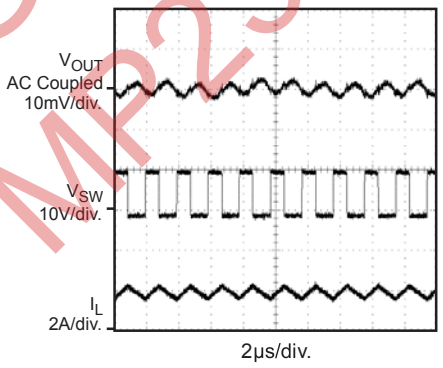

NOT RECOMMENDED FOR NEW DESIGNS REFER TO MP2338

MPS Proprietary Information. Unauthorized Photocopy and Duplication Prohibited.
© 2011 MPS. All Rights Reserved.

TYPICAL PERFORMANCE CHARACTERISTICS *(continued)*

V_{IN} = 12V, C1 = 10µF, C2 = 22µF, L1 = 10µH, f_{SW}=500kHz, and T_A = +25°C, unless otherwise noted.

Startup
I_{OUT} = 0.1A

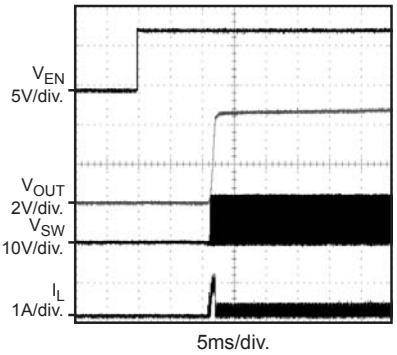

Shutdown
I_{OUT} = 0.1A

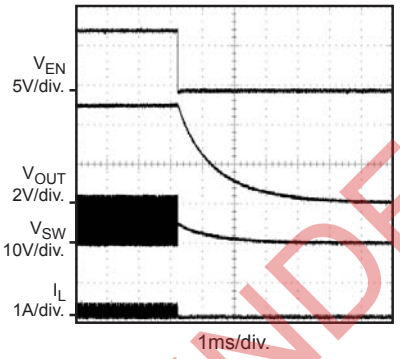

Startup
I_{OUT} = 1A

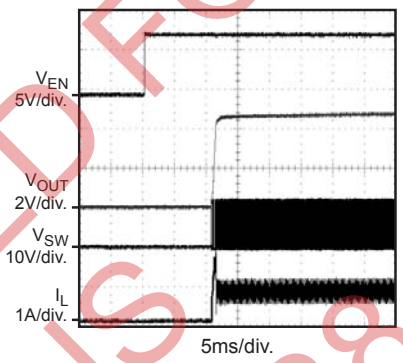

Shutdown
I_{OUT} = 1A

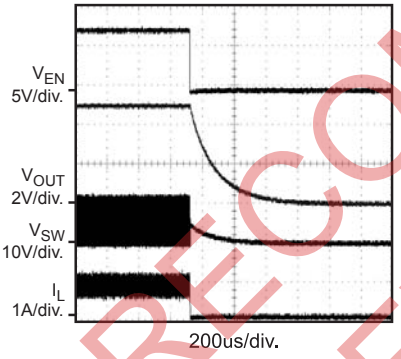

Startup
I_{OUT} = 2A

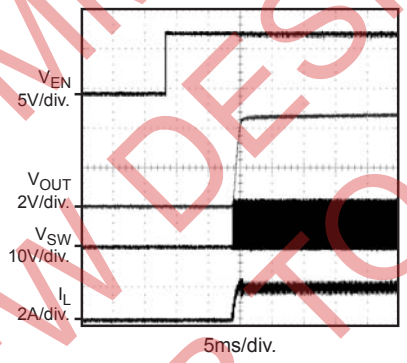

Shutdown
I_{OUT} = 2A

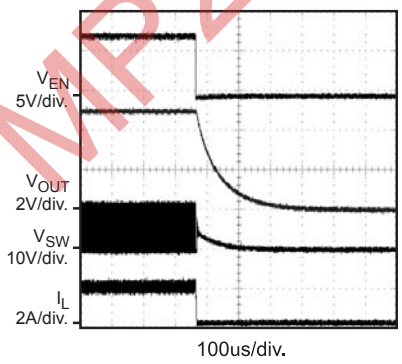

Short Circuit Entry
I_{OUT} = 0.1A to Short

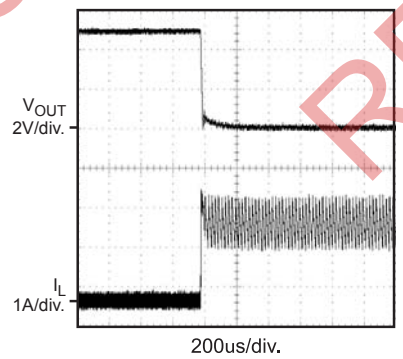

Short Circuit Recovery
I_{OUT} = Short to 0.1A

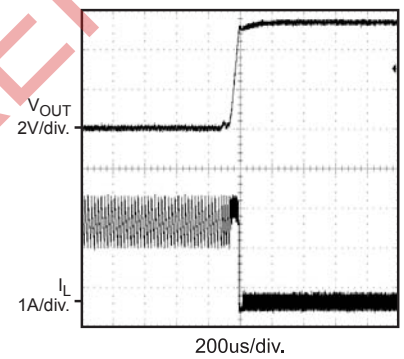

NOT RECOMMENDED FOR NEW DESIGNS REFER TO MP2338

MPS Proprietary Information. Unauthorized Photocopy and Duplication Prohibited.
© 2011 MPS. All Rights Reserved.

BLOCK DIAGRAM

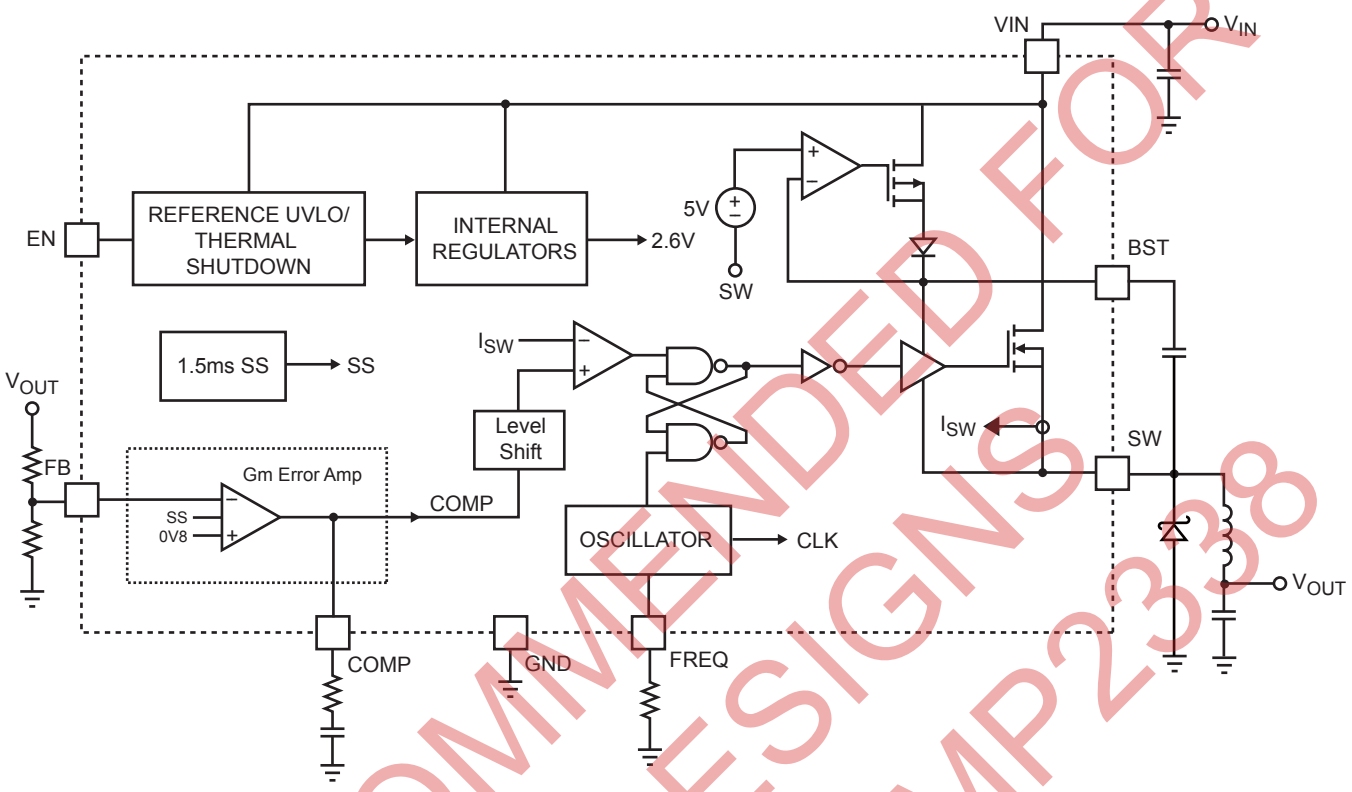

Figure 1—Functional Block Diagram

OPERATION

The MP1584 is a variable frequency, non-synchronous, step-down switching regulator with an integrated high-side high voltage power MOSFET. It provides a highly efficient solution with current mode control for fast loop response and easy compensation. It features a wide input voltage range, internal soft-start control and precision current limiting. Its very low operational quiescent current makes it suitable for battery powered applications.

PWM Control

At moderate to high output current, the MP1584 operates in a fixed frequency, peak current control mode to regulate the output voltage. A PWM cycle is initiated by the internal clock. The power MOSFET is turned on and remains on until its current reaches the value set by the COMP voltage. When the power switch is off, it remains off for at least 100ns before the next cycle starts. If, in one PWM period, the current in the power MOSFET does not reach the COMP set current value, the power MOSFET remains on, saving a turn-off operation.

NOT RECOMMENDED FOR NEW DESIGNS REFER TO MP2338

MPS Proprietary Information. Unauthorized Photocopy and Duplication Prohibited.
© 2011 MPS. All Rights Reserved.

Error Amplifier

The error amplifier compares the FB pin voltage with the internal reference (REF) and outputs a current proportional to the difference between the two. This output current is then used to charge the external compensation network to form the COMP voltage, which is used to control the power MOSFET current.

During operation, the minimum COMP voltage is clamped to 0.9V and its maximum is clamped to 2.0V. COMP is internally pulled down to GND in shutdown mode. COMP should not be pulled up beyond 2.6V.

Internal Regulator

Most of the internal circuitries are powered from the 2.6V internal regulator. This regulator takes the VIN input and operates in the full VIN range. When VIN is greater than 3.0V, the output of the regulator is in full regulation. When VIN is lower than 3.0V, the output decreases.

Enable Control

The MP1584 has a dedicated enable control pin (EN). With high enough input voltage, the chip can be enabled and disabled by EN which has positive logic. Its falling threshold is a precision 1.2V, and its rising threshold is 1.5V (300mV higher).

When floating, EN is pulled up to about 3.0V by an internal 1μA current source so it is enabled. To pull it down, 1μA current capability is needed.

When EN is pulled down below 1.2V, the chip is put into the lowest shutdown current mode. When EN is higher than zero but lower than its rising threshold, the chip is still in shutdown mode but the shutdown current increases slightly.

Under-Voltage Lockout (UVLO)

Under-voltage lockout (UVLO) is implemented to protect the chip from operating at insufficient supply voltage. The UVLO rising threshold is about 3.0V while its falling threshold is a consistent 2.6V.

Internal Soft-Start

The soft-start is implemented to prevent the converter output voltage from overshooting during startup. When the chip starts, the internal circuitry generates a soft-start voltage (SS) ramping up from 0V to 2.6V. When it is lower than the internal reference (REF), SS overrides REF so the error amplifier uses SS as the reference. When SS is higher than REF, REF regains control.

Thermal Shutdown

Thermal shutdown is implemented to prevent the chip from operating at exceedingly high temperatures. When the silicon die temperature is higher than its upper threshold, it shuts down the whole chip. When the temperature is lower than its lower threshold, the chip is enabled again.

Floating Driver and Bootstrap Charging

The floating power MOSFET driver is powered by an external bootstrap capacitor. This floating driver has its own UVLO protection. This UVLO's rising threshold is 2.2V with a threshold of 150mV.

The bootstrap capacitor is charged and regulated to about 5V by the dedicated internal bootstrap regulator. When the voltage between the BST and SW nodes is lower than its regulation, a PMOS pass transistor connected from VIN to BST is turned on. The charging current path is from VIN, BST and then to SW. External circuit should provide enough voltage headroom to facilitate the charging.

As long as VIN is sufficiently higher than SW, the bootstrap capacitor can be charged. When the power MOSFET is ON, VIN is about equal to SW so the bootstrap capacitor cannot be charged. When the external diode is on, the difference between VIN and SW is largest, thus making it the best period to charge. When there is no current in the inductor, SW equals the output voltage V_{OUT} so the difference between V_{IN} and V_{OUT} can be used to charge the bootstrap capacitor.

NOT RECOMMENDED FOR NEW DESIGNS REFER TO MP2338

MPS Proprietary Information. Unauthorized Photocopy and Duplication Prohibited.
© 2011 MPS. All Rights Reserved.

At higher duty cycle operation condition, the time period available to the bootstrap charging is less so the bootstrap capacitor may not be sufficiently charged.

In case the internal circuit does not have sufficient voltage and the bootstrap capacitor is not charged, extra external circuitry can be used to ensure the bootstrap voltage is in the normal operational region. Refer to *External Bootstrap Diode* in Application section.

The DC quiescent current of the floating driver is about 20μA. Make sure the bleeding current at the SW node is higher than this value, such that:

$$I_O + \frac{V_O}{(R1+R2)} > 20\mu A$$

Current Comparator and Current Limit

The power MOSFET current is accurately sensed via a current sense MOSFET. It is then fed to the high speed current comparator for the current mode control purpose. The current comparator takes this sensed current as one of its inputs. When the power MOSFET is turned on, the comparator is first blanked till the end of the turn-on transition to avoid noise issues. The comparator then compares the power switch current with the COMP voltage. When the sensed current is higher than the COMP voltage, the comparator output is low, turning off the power MOSFET. The cycle-by-cycle maximum current of the internal power MOSFET is internally limited.

Startup and Shutdown

If both VIN and EN are higher than their appropriate thresholds, the chip starts. The reference block starts first, generating stable reference voltage and currents, and then the internal regulator is enabled. The regulator provides stable supply for the remaining circuitries.

While the internal supply rail is up, an internal timer holds the power MOSFET OFF for about 50μs to blank the startup glitches. When the internal soft-start block is enabled, it first holds its SS output low to ensure the remaining circuitries are ready and then slowly ramps up.

Three events can shut down the chip: EN low, VIN low and thermal shutdown. In the shutdown procedure, power MOSFET is turned off first to avoid any fault triggering. The COMP voltage and the internal supply rail are then pulled down.

Programmable Oscillator

The MP1584 oscillating frequency is set by an external resistor, R_{freq} from the FREQ pin to ground. The value of R_{freq} can be calculated from:

$$R_{freq}(k\Omega) = \frac{180000}{[f_s(kHz)]^{1.1}}$$

NOT RECOMMENDED FOR NEW DESIGNS REFER TO MP2359

MPS Proprietary Information. Unauthorized Photocopy and Duplication Prohibited.
© 2011 MPS. All Rights Reserved.

APPLICATION INFORMATION

COMPONENT SELECTION

Setting the Output Voltage

The output voltage is set using a resistive voltage divider from the output voltage to FB pin. The voltage divider divides the output voltage down to the feedback voltage by the ratio:

$$V_{FB} = V_{OUT} \frac{R2}{R1 + R2}$$

Thus the output voltage is:

$$V_{OUT} = V_{FB} \frac{(R1 + R2)}{R2}$$

About 20μA current from high side BS circuitry can be seen at the output when the MP1584 is at no load. In order to absorb this small amount of current, keep R2 under 40KΩ. A typical value for R2 can be 40.2kΩ. With this value, R1 can be determined by:

$$R1 = 50.25 \times (V_{OUT} - 0.8)(k\Omega)$$

For example, for a 3.3V output voltage, R2 is 40.2kΩ, and R1 is 127kΩ.

Inductor

The inductor is required to supply constant current to the output load while being driven by the switched input voltage. A larger value inductor will result in less ripple current that will result in lower output ripple voltage. However, the larger value inductor will have a larger physical size, higher series resistance, and/or lower saturation current.

A good rule for determining the inductance to use is to allow the peak-to-peak ripple current in the inductor to be approximately 30% of the maximum switch current limit. Also, make sure that the peak inductor current is below the maximum switch current limit. The inductance value can be calculated by:

$$L1 = \frac{V_{OUT}}{f_S \times \Delta I_L} \times \left(1 - \frac{V_{OUT}}{V_{IN}}\right)$$

Where V_{OUT} is the output voltage, V_{IN} is the input voltage, f_S is the switching frequency, and ΔI_L is the peak-to-peak inductor ripple current.

Choose an inductor that will not saturate under the maximum inductor peak current. The peak inductor current can be calculated by:

$$I_{LP} = I_{LOAD} + \frac{V_{OUT}}{2 \times f_S \times L1} \times \left(1 - \frac{V_{OUT}}{V_{IN}}\right)$$

Where I_{LOAD} is the load current.

Table 1 lists a number of suitable inductors from various manufacturers. The choice of which style inductor to use mainly depends on the price vs. size requirements and any EMI requirement.

NOT RECOMMENDED FOR NEW DESIGNS REFER TO MP2338

MPS Proprietary Information. Unauthorized Photocopy and Duplication Prohibited.
© 2011 MPS. All Rights Reserved.

Table 1—Inductor Selection Guide

Part Number	Inductance (µH)	Max DCR (Ω)	Current Rating (A)	Dimensions L x W x H (mm^3)
Wurth Electronics				
7447789003	3.3	0.024	3.42	7.3x7.3x3.2
744066100	10	0.035	3.6	10x10x3.8
744771115	15	0.025	3.75	12x12x6
744771122	22	0.031	3.37	12x12x6
TDK				
RLF7030T-3R3	3.3	0.02	4.1	7.3x6.8x3.2
RLF7030T-4R7	4.7	0.031	3.4	7.3x6.8x3.2
SLF10145T-100	10	0.0364	3	10.1x10.1x4.5
SLF12565T-220M3R5	22	0.0316	3.5	12.5x12.5x6.5
Toko				
FDV0630-3R3M	3.3	0.031	4.3	7.7x7x3
FDV0630-4R7M	4.7	0.049	3.3	7.7x7x3
919AS-100M	10	0.0265	4.3	10.3x10.3x4.5
919AS-160M	16	0.0492	3.3	10.3x10.3x4.5
919AS-220M	22	0.0776	3	10.3x10.3x4.5

Output Rectifier Diode

The output rectifier diode supplies the current to the inductor when the high-side switch is off. To reduce losses due to the diode forward voltage and recovery times, use a Schottky diode.

Choose a diode whose maximum reverse voltage rating is greater than the maximum input voltage, and whose current rating is greater than the maximum load current. Table 2 lists example Schottky diodes and manufacturers.

Table 2—Diode Selection Guide

Diodes	Voltage/ Current Rating	Manufacturer
B340A-13-F	40V, 3A	Diodes Inc.
CMSH3-40MA	40V, 3A	Central Semi

Input Capacitor

The input current to the step-down converter is discontinuous, therefore a capacitor is required to supply the AC current to the step-down converter while maintaining the DC input voltage. Use low ESR capacitors for the best performance. Ceramic capacitors are preferred, but tantalum or low-ESR electrolytic capacitors may also suffice.

For simplification, choose the input capacitor with RMS current rating greater than half of the maximum load current.

NOT RECOMMENDED FOR NEW DESIGNS REFER TO MP2338

MPS Proprietary Information. Unauthorized Photocopy and Duplication Prohibited.
© 2011 MPS. All Rights Reserved.

The input capacitor (C1) can be electrolytic, tantalum or ceramic. When using electrolytic or tantalum capacitors, a small, high quality ceramic capacitor, i.e. 0.1μF, should be placed as close to the IC as possible. When using ceramic capacitors, make sure that they have enough capacitance to provide sufficient charge to prevent excessive voltage ripple at input. The input voltage ripple caused by capacitance can be estimated by:

$$\Delta V_{IN} = \frac{I_{LOAD}}{f_S \times C1} \times \frac{V_{OUT}}{V_{IN}} \times \left(1 - \frac{V_{OUT}}{V_{IN}}\right)$$

Output Capacitor

The output capacitor (C2) is required to maintain the DC output voltage. Ceramic, tantalum, or low ESR electrolytic capacitors are recommended. Low ESR capacitors are preferred to keep the output voltage ripple low. The output voltage ripple can be estimated by:

$$\Delta V_{OUT} = \frac{V_{OUT}}{f_S \times L} \times \left(1 - \frac{V_{OUT}}{V_{IN}}\right) \times \left(R_{ESR} + \frac{1}{8 \times f_S \times C2}\right)$$

Where L is the inductor value and R_{ESR} is the equivalent series resistance (ESR) value of the output capacitor.

In the case of ceramic capacitors, the impedance at the switching frequency is dominated by the capacitance. The output voltage ripple is mainly caused by the capacitance. For simplification, the output voltage ripple can be estimated by:

$$\Delta V_{OUT} = \frac{V_{OUT}}{8 \times f_S^2 \times L \times C2} \times \left(1 - \frac{V_{OUT}}{V_{IN}}\right)$$

In the case of tantalum or electrolytic capacitors, the ESR dominates the impedance at the switching frequency. For simplification, the output ripple can be approximated to:

$$\Delta V_{OUT} = \frac{V_{OUT}}{f_S \times L} \times \left(1 - \frac{V_{OUT}}{V_{IN}}\right) \times R_{ESR}$$

The characteristics of the output capacitor also affect the stability of the regulation system. The MP1584 can be optimized for a wide range of capacitance and ESR values.

Compensation Components

MP1584 employs current mode control for easy compensation and fast transient response. The system stability and transient response are controlled through the COMP pin. COMP pin is the output of the internal error amplifier. A series capacitor-resistor combination sets a pole-zero combination to control the characteristics of the control system. The DC gain of the voltage feedback loop is given by:

$$A_{VDC} = R_{LOAD} \times G_{CS} \times A_{VEA} \times \frac{V_{FB}}{V_{OUT}}$$

Where A_{VEA} is the error amplifier voltage gain, 200V/V; G_{CS} is the current sense transconductance, 9A/V; R_{LOAD} is the load resistor value.

The system has two poles of importance. One is due to the compensation capacitor (C3), the output resistor of error amplifier. The other is due to the output capacitor and the load resistor. These poles are located at:

$$f_{P1} = \frac{G_{EA}}{2\pi \times C3 \times A_{VEA}}$$

$$f_{P2} = \frac{1}{2\pi \times C2 \times R_{LOAD}}$$

Where, G_{EA} is the error amplifier transconductance, 60μA/V.

The system has one zero of importance, due to the compensation capacitor (C3) and the compensation resistor (R3). This zero is located at:

$$f_{Z1} = \frac{1}{2\pi \times C3 \times R3}$$

The system may have another zero of importance, if the output capacitor has a large capacitance and/or a high ESR value. The zero, due to the ESR and capacitance of the output capacitor, is located at:

$$f_{ESR} = \frac{1}{2\pi \times C2 \times R_{ESR}}$$

NOT RECOMMENDED FOR NEW DESIGNS REFER TO MP2338

MPS Proprietary Information. Unauthorized Photocopy and Duplication Prohibited.
© 2011 MPS. All Rights Reserved.

In this case (as shown in Figure 2), a third pole set by the compensation capacitor (C6) and the compensation resistor (R3) is used to compensate the effect of the ESR zero on the loop gain. This pole is located at:

$$f_{P3} = \frac{1}{2\pi \times C6 \times R3}$$

The goal of compensation design is to shape the converter transfer function to get a desired loop gain. The system crossover frequency where the feedback loop has the unity gain is important. Lower crossover frequencies result in slower line and load transient responses, while higher crossover frequencies could cause system unstable. A good rule of thumb is to set the crossover frequency to approximately one-tenth of the switching frequency. The Table 3 lists the typical values of compensation components for some standard output voltages with various output capacitors and inductors. The values of the compensation components have been optimized for fast transient responses and good stability at given conditions.

Table 3—Compensation Values for Typical Output Voltage/Capacitor Combinations

V_{OUT} (V)	L (μH)	C2 (μF)	R3 (kΩ)	C3 (pF)	C6
1.8	4.7	47	105	100	None
2.5	4.7 - 6.8	22	54.9	220	None
3.3	6.8 -10	22	68.1	220	None
5	15 - 22	22	100	150	None
12	22 - 33	22	147	150	None

To optimize the compensation components for conditions not listed in Table 3, the following procedure can be used.

1. Choose the compensation resistor (R3) to set the desired crossover frequency. Determine the R3 value by the following equation:

$$R3 = \frac{2\pi \times C2 \times f_C}{G_{EA} \times G_{CS}} \times \frac{V_{OUT}}{V_{FB}}$$

Where f_C is the desired crossover frequency.

2. Choose the compensation capacitor (C3) to achieve the desired phase margin. For applications with typical inductor values, setting the compensation zero, f_{Z1}, below one forth of the crossover frequency provides sufficient phase margin. Determine the C3 value by the following equation:

$$C3 > \frac{4}{2\pi \times R3 \times f_C}$$

3. Determine if the second compensation capacitor (C6) is required. It is required if the ESR zero of the output capacitor is located at less than half of the switching frequency, or the following relationship is valid:

$$\frac{1}{2\pi \times C2 \times R_{ESR}} < \frac{f_S}{2}$$

If this is the case, then add the second compensation capacitor (C6) to set the pole f_{P3} at the location of the ESR zero. Determine the C6 value by the equation:

$$C6 = \frac{C2 \times R_{ESR}}{R3}$$

NOT RECOMMENDED FOR NEW DESIGNS REFER TO MP2338

MPS Proprietary Information. Unauthorized Photocopy and Duplication Prohibited.
© 2011 MPS. All Rights Reserved.

High Frequency Operation

The switching frequency of MP1584 can be programmed up to 1.5MHz with an external resistor.

With higher switching frequencies, the inductive reactance (X_L) of capacitor comes to dominate, so that the ESL of input/output capacitor determines the input/output ripple voltage at higher switching frequency. As a result of that, high frequency ceramic capacitor is strongly recommended as input decoupling capacitor and output filtering capacitor for such high frequency operation.

Layout becomes more important when the device switches at higher frequency. It is essential to place the input decoupling capacitor, catch diode and the MP1584 (Vin pin, SW pin and PGND) as close as possible, with traces that are very short and fairly wide. This can help to greatly reduce the voltage spike on SW node, and lower the EMI noise level as well.

Try to run the feedback trace as far from the inductor and noisy power traces as possible. It is often a good idea to run the feedback trace on the side of the PCB opposite of the inductor with a ground plane separating the two. The compensation components should be placed closed to the MP1584. Do not place the compensation components close to or under high dv/dt SW node, or inside the high di/dt power loop. If you have to do so, the proper ground plane must be in place to isolate those. Switching loss is expected to be increased at high switching frequency. To help to improve the thermal conduction, a grid of thermal vias can be created right under the exposed pad. It is recommended that they be small (15mil barrel diameter) so that the hole is essentially filled up during the plating process, thus aiding conduction to the other side. Too large a hole can cause ‘solder wicking’ problems during the reflow soldering process. The pitch (distance between the centers) of several such thermal vias in an area is typically 40mil.

External Bootstrap Diode

It is recommended that an external bootstrap diode be added when the input voltage is no greater than 5V or the 5V rail is available in the system. This helps improve the efficiency of the regulator. The bootstrap diode can be a low cost one such as IN4148 or BAT54.

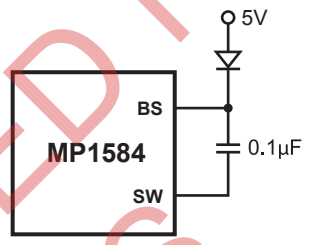

Figure 2—External Bootstrap Diode

This diode is also recommended for high duty cycle operation (when V_{OUT} /V_{IN} >65%) or low V_{IN} (<5Vin) applications.

At no load or light load, the converter may operate in pulse skipping mode in order to maintain the output voltage in regulation. Thus there is less time to refresh the BS voltage. In order to have enough gate voltage under such operating conditions, the difference of V_{IN} –V_{OUT} should be greater than 3V. For example, if the V_{OUT} is set to 3.3V, the V_{IN} needs to be higher than 3.3V+3V=6.3V to maintain enough BS voltage at no load or light load. To meet this requirement, EN pin can be used to program the input UVLO voltage to Vout+3V.

NOT RECOMMENDED FOR NEW DESIGNS REFER TO MP2338

MPS Proprietary Information. Unauthorized Photocopy and Duplication Prohibited.
© 2011 MPS. All Rights Reserved.

TYPICAL APPLICATION CIRCUITS

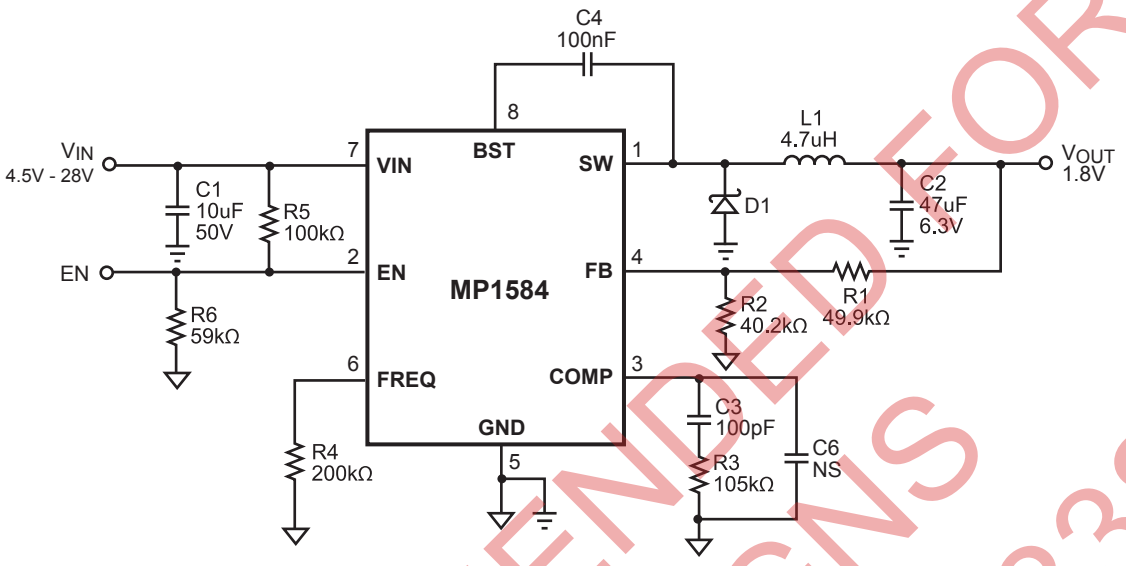

Figure 3—1.8V Output Typical Application Schematic

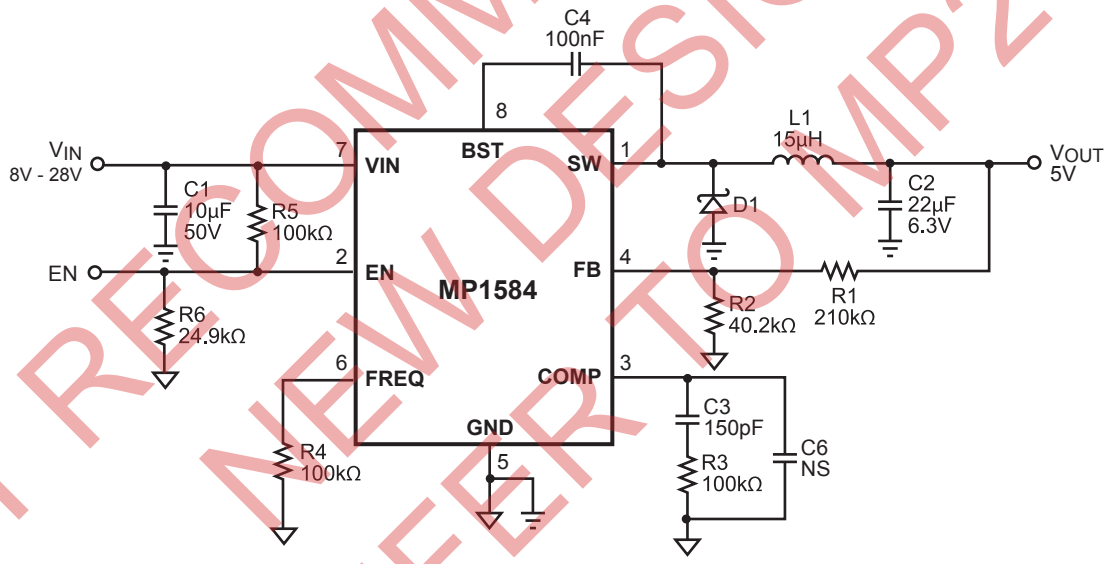

Figure 4—5V Output Typical Application Schematic

NOT RECOMMENDED FOR NEW DESIGNS REFER TO MP2338

MPS Proprietary Information. Unauthorized Photocopy and Duplication Prohibited.
© 2011 MPS. All Rights Reserved.

PCB LAYOUT GUIDE

PCB layout is very important to achieve stable operation. It is highly recommended to duplicate EVB layout for optimum performance.

If change is necessary, please follow these guidelines and take Figure 5 for reference.

1) Keep the path of switching current short and minimize the loop area formed by Input cap, high-side MOSFET and external switching diode.
2) Bypass ceramic capacitors are suggested to be put close to the V_{IN} Pin.
3) Ensure all feedback connections are short and direct. Place the feedback resistors and compensation components as close to the chip as possible.
4) Route SW away from sensitive analog areas such as FB.
5) Connect IN, SW, and especially GND respectively to a large copper area to cool the chip to improve thermal performance and long-term reliability.

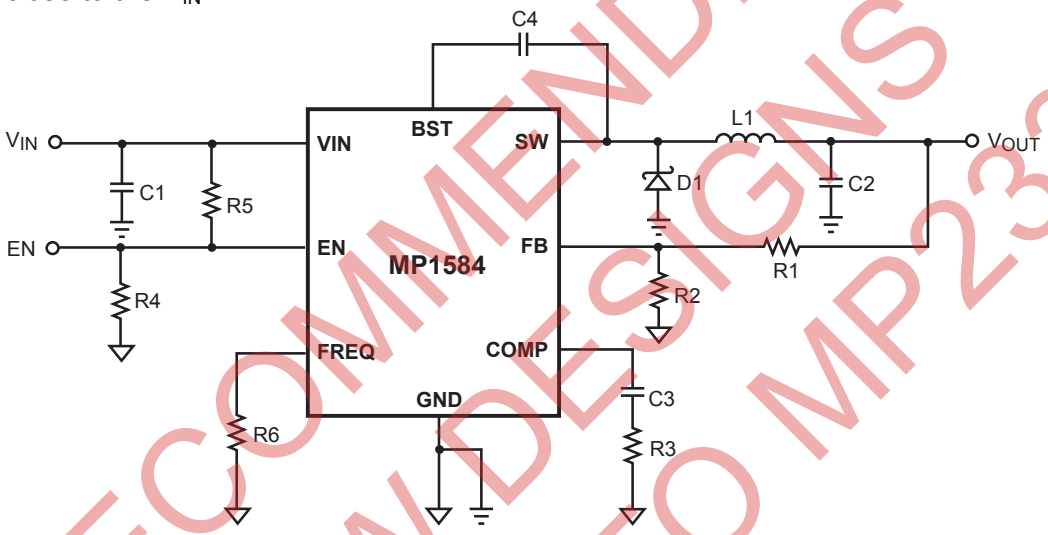

MP1584 Typical Application Circuit

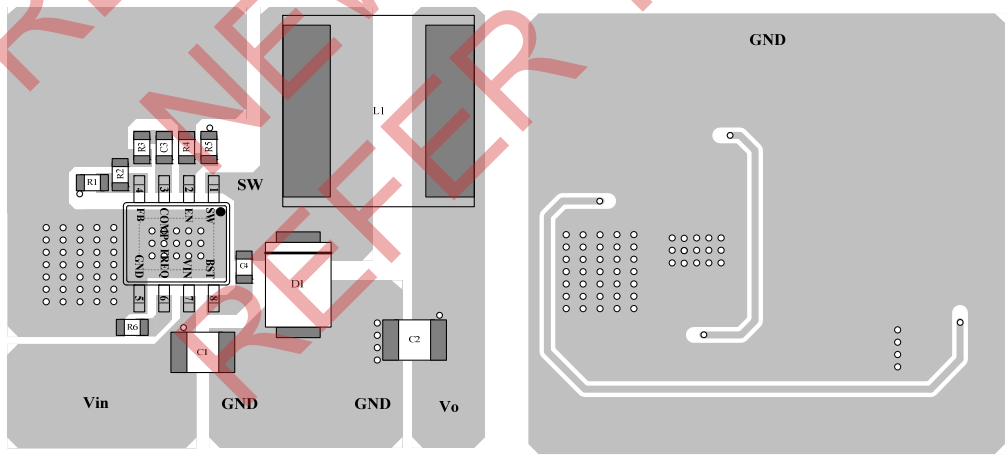

Top Layer **Bottom Layer**

Figure 5—MP1584 Typical Application Circuit and PCB Layout Guide

NOT RECOMMENDED FOR NEW DESIGNS REFER TO MP2338

MPS Proprietary Information. Unauthorized Photocopy and Duplication Prohibited.
© 2011 MPS. All Rights Reserved.

PACKAGE INFORMATION

SOIC8E (EXPOSED PAD)

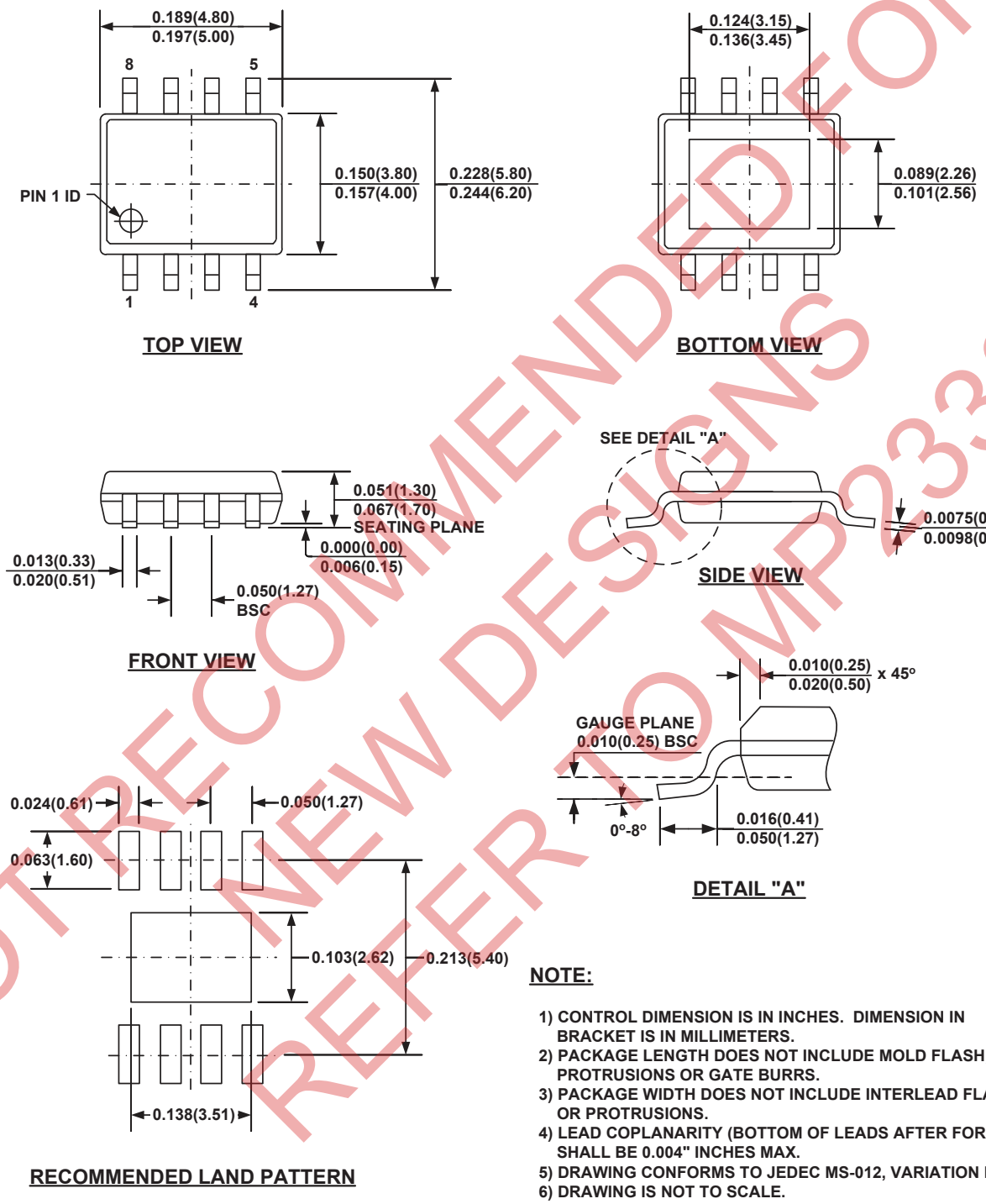

NOTE:

1) CONTROL DIMENSION IS IN INCHES. DIMENSION IN BRACKET IS IN MILLIMETERS.
2) PACKAGE LENGTH DOES NOT INCLUDE MOLD FLASH, PROTRUSIONS OR GATE BURRS.
3) PACKAGE WIDTH DOES NOT INCLUDE INTERLEAD FLASH OR PROTRUSIONS.
4) LEAD COPLANARITY (BOTTOM OF LEADS AFTER FORMING) SHALL BE 0.004" INCHES MAX.
5) DRAWING CONFORMS TO JEDEC MS-012, VARIATION BA.
6) DRAWING IS NOT TO SCALE.

NOT RECOMMENDED FOR NEW DESIGNS REFER TO MP2338

NOTICE: The information in this document is subject to change without notice. Users should warrant and guarantee that third party Intellectual Property rights are not infringed upon when integrating MPS products into any application. MPS will not assume any legal responsibility for any said applications.

MPS Proprietary Information. Unauthorized Photocopy and Duplication Prohibited.
© 2011 MPS. All Rights Reserved.